SPARE PARTS LIST

Hisense EUROPE

Date 13.09.2022
Time 20:38:12

Type	DW40.2	**Brand name**	ASKO
Model	DBI663ISSOF.U	**Version**	07.03.2019
Art. No.	729680	**Service index**	04

160656

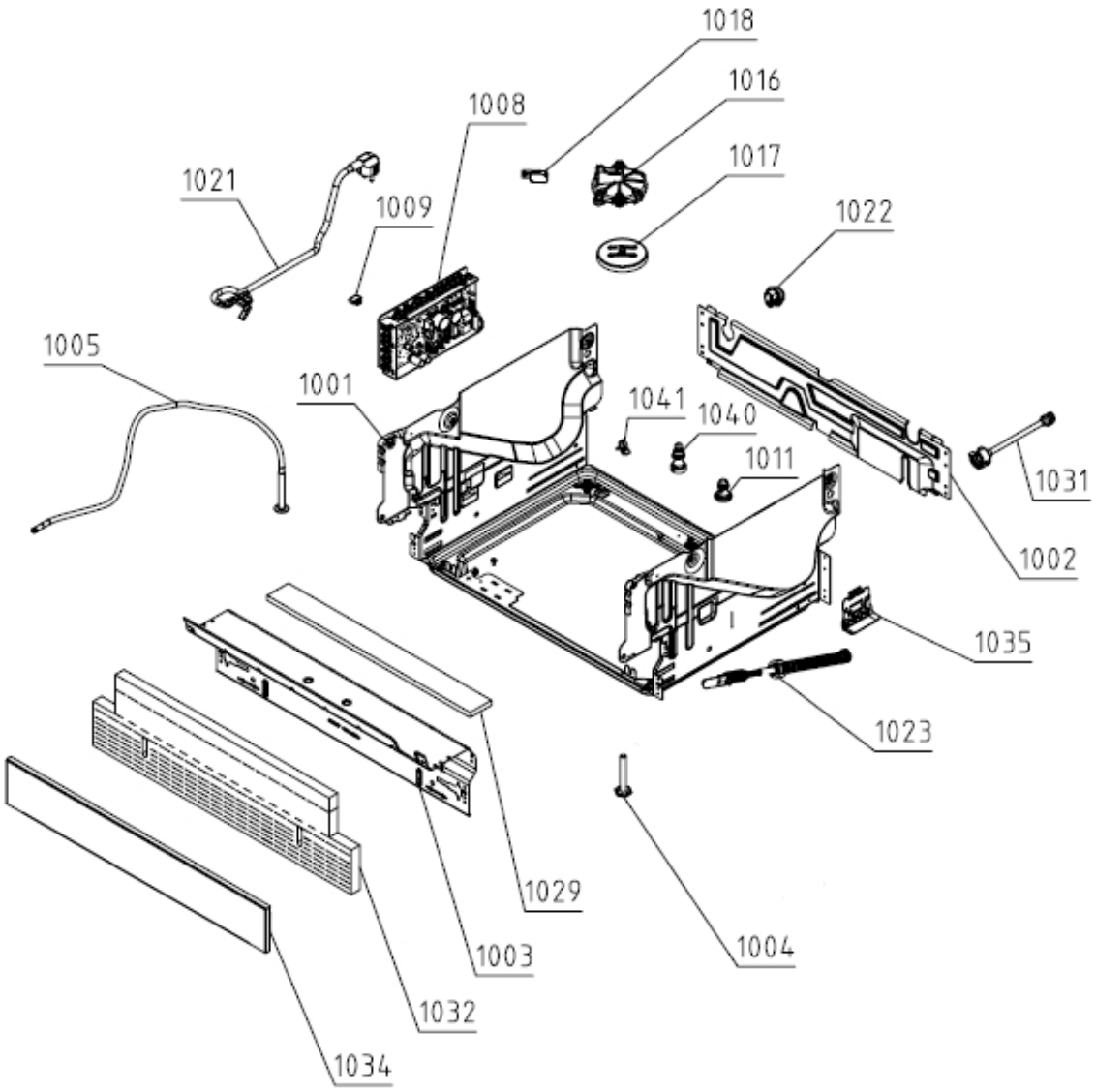

Position	Ident	Spare part description	Quantity	Validity	Extra ID
1001	813325	BASE WITH FEET	1		
1001A	700436	SCREW A4 MRT M4X8 VAXED TORX20 BUFAB	2		
1001B	700474	SCREW	4		
1002	587257	BACK PANEL	1		

Position	Ident	Spare part description	Quantity	Validity	Extra ID
1003	700350	COVER	1		
1003A	700451	SCREW RTS ST4,2X13 FZB TORX20	18		
1004	700290	FOOT	2		
1005	700289	ADJUSTABLE FOOT DW ASSY	1		
1008	692013	CONTROL UNIT C	1		
1011	576727	CIRCULATION PUMP DAMPER	2		
1016	512052	FLOAT BRACKET	1		
1017	655019	FLOAT	1		
1018	700335	MICROSWITCH	1		
1021	664836	SUPPLY CORD SJT 3X14AWG 1550	1		
1022	413719	CABLE GROMMET Z13	1		
1023	700527	SPRING	2		
1029	700377	ISOLATION	1		
1031	700266	INLET HOSE	1		
1031B	700483	GASKET	1		
1032	700292	ISOLATION	1		
1034	700541	BASEBOARD	1		
1034A	176604	SCREW RXS 4,2X9,5 FZB	2		
1035	700351	SPRING SUPPORT LEFT	2		
1035A	274037	SCREW RTK ST4,2X9,5 FZB WAX	2		
1040	700408	WASHING MOTOR CUSHION	1		
1041	700411	SUPPORT	1		

161655

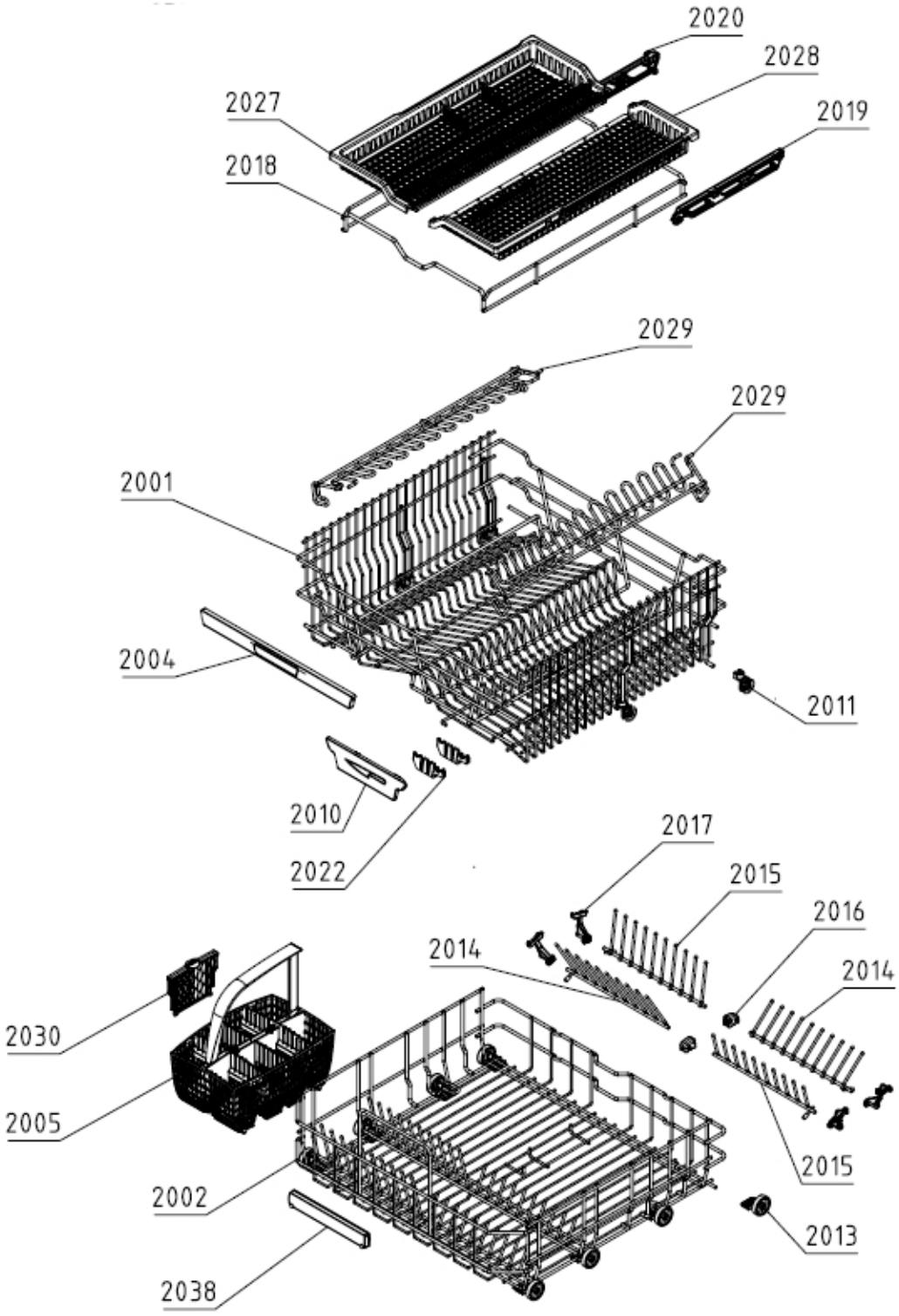

Position	Ident	Spare part description	Quantity	Validity	Extra ID
2001	490026	UPP.BASKET PREMIUM 7502-B ASSY	1		
2002	489454	LOWER BASKET EXCLUSIVE 7502-B ASSY	1		
2004	435209	HANDLE U-BASKET ASSY ASKO	1		
2005	428811	CUTLERY BASKET	1		
2010	476838	KNIVES GUARD 5502-B	1		

Position	Ident	Spare part description	Quantity	Validity	Extra ID
2011	655318	BASKET WHEEL TEFLON 5502-B	4		
2013	700391	LOWER BASKET WHEEL	8		
2014	489477	PLATE-RACK SHORT R 7502-B	2		
2015	489476	PLATE-RACK SHORT L 7502-B	2		
2016	484431	PLATE-RACK HOLDER SHORT 5502-B	2		
2017	555551	PLATE-RACK HOLDER ADJUSTMENT 5502-B	4		
2018	476786	KNIVES BASKET FRAME 7502-B	1		
2019	488393	UPPER BASKET ADJUSTMENT UNIT R ASSY	1		
2020	488392	UPPER BASKET ADJUSTMENT UNIT L ASSY	1		
2022	700321	KNIFE RACK	2		
2027	488568	CUTLERY BASKET INSERT L ASSY	1		
2028	488569	CUTLERY BASKET INSERT R ASSY	1		
2029	476840	WINE GLASSES SHELF ADJUSTABLE NCS 7502-B	2		
2030	700390	CUTLERY BASKET COVER	1		
2038	427447	HANDLE	1		

162655

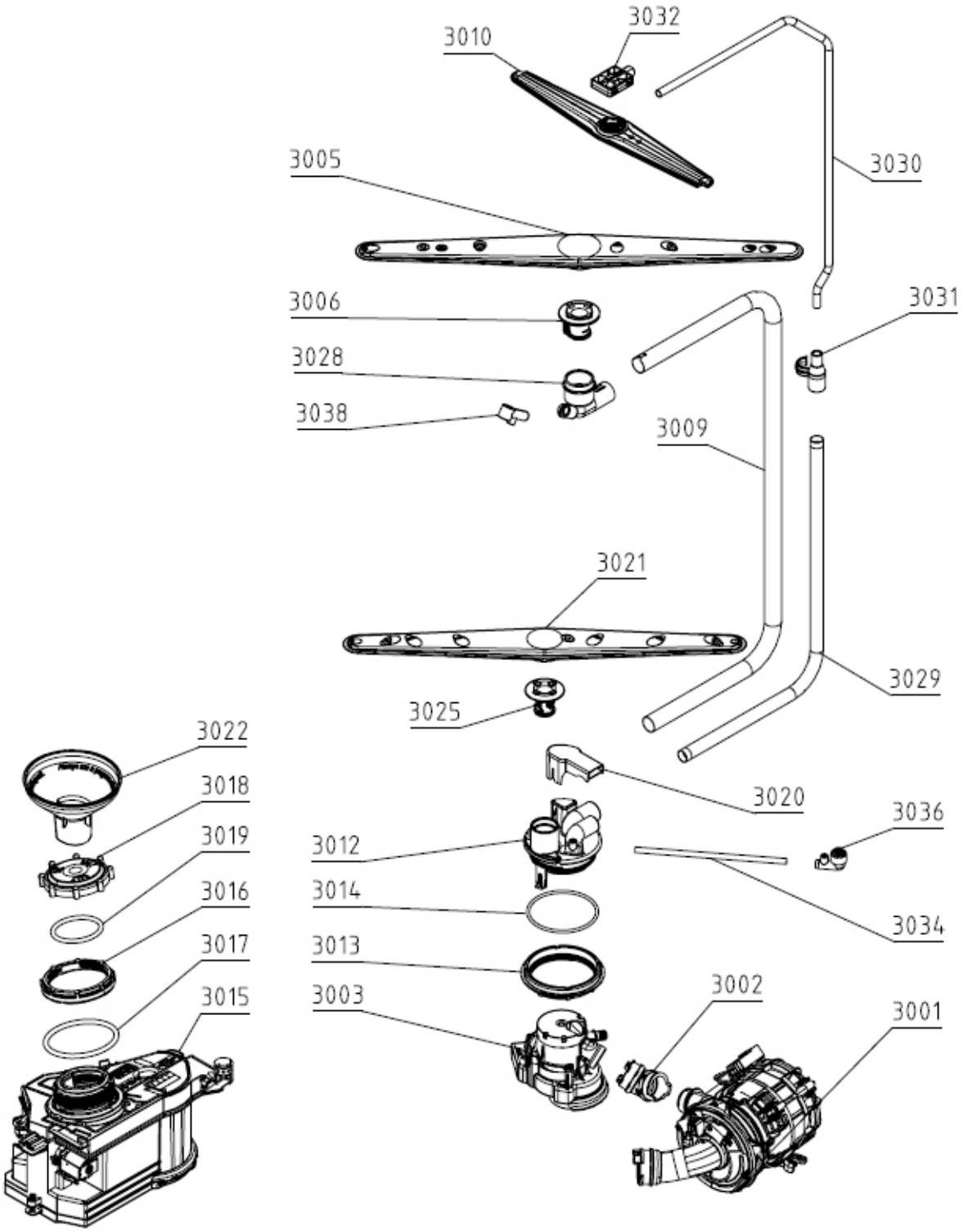

Position	Ident	Spare part description	Quantity	Validity	Extra ID
3001	512073	CIRC.PUMP STD W.HEATER 120V 60HZ 1200W	1		
3001A	537874	CLAMP - WIRE D 38	1		
3001B	680172	HEATER,O-RING FOR CIRC.PUMP DW US 1600	1		
3001C	680174	CAPACITOR FOR CIRC.PUMP DW US 120V/60HZ	1		
3002	545949	HOSE SET/CLAMP FOR CIRC.PUMP	1		

Position	Ident	Spare part description	Quantity	Validity	Extra ID
3003	813321	DIVERTER VALVE SET 120V	1		
3005	426740	SPRAYARM UPPER ASSY	1		
3006	700348	SUPPORT	1		
3009	493522	SPRAYER TUBE D18 DW20	1		
3010	476717	SPRAY ARM UPPER ASSY	1		
3012	794802	SPRAY TOWER	1		
3013	700323	RING	1		
3014	700437	GASKET	1		
3015	514533	WATER SOFTENER 120V	1		
3016	514534	WATER SOFTENER UNIT LOCK RING	1		
3017	514535	O-RING 70X5	1		
3018	514536	WATER SOFTENER UNIT COVER	1		
3019	514537	O-RING 47X4,5	1		
3020	520549	DISCHARGE COVER DW16	1		
3021	474374	SPRAY ARM LOW ASSY DW16	1		
3022	561399	SALT FUNNEL DW30 5502-B	1		
3025	474365	SPRAY ARM HOLDER LOW.5502-B	1		
3028	700487	SUPPORT	1		
3029	499664	SPRAYER TUBE D14 L275 XL	1		
3030	481405	SPRAYER TUBE D8 XXL	1		
3031	476714	TUBE CONNECTING PART D14-D8 5502-B	1		
3032	476715	SPRAY ARM ATTACHMENT MINI 5502-B	1		
3034	700329	HOSE	1		
3036	484955	SPRAYER NOZZLE R ASSY	1		
3038	700324	SPRAYING POUT	1		

163652

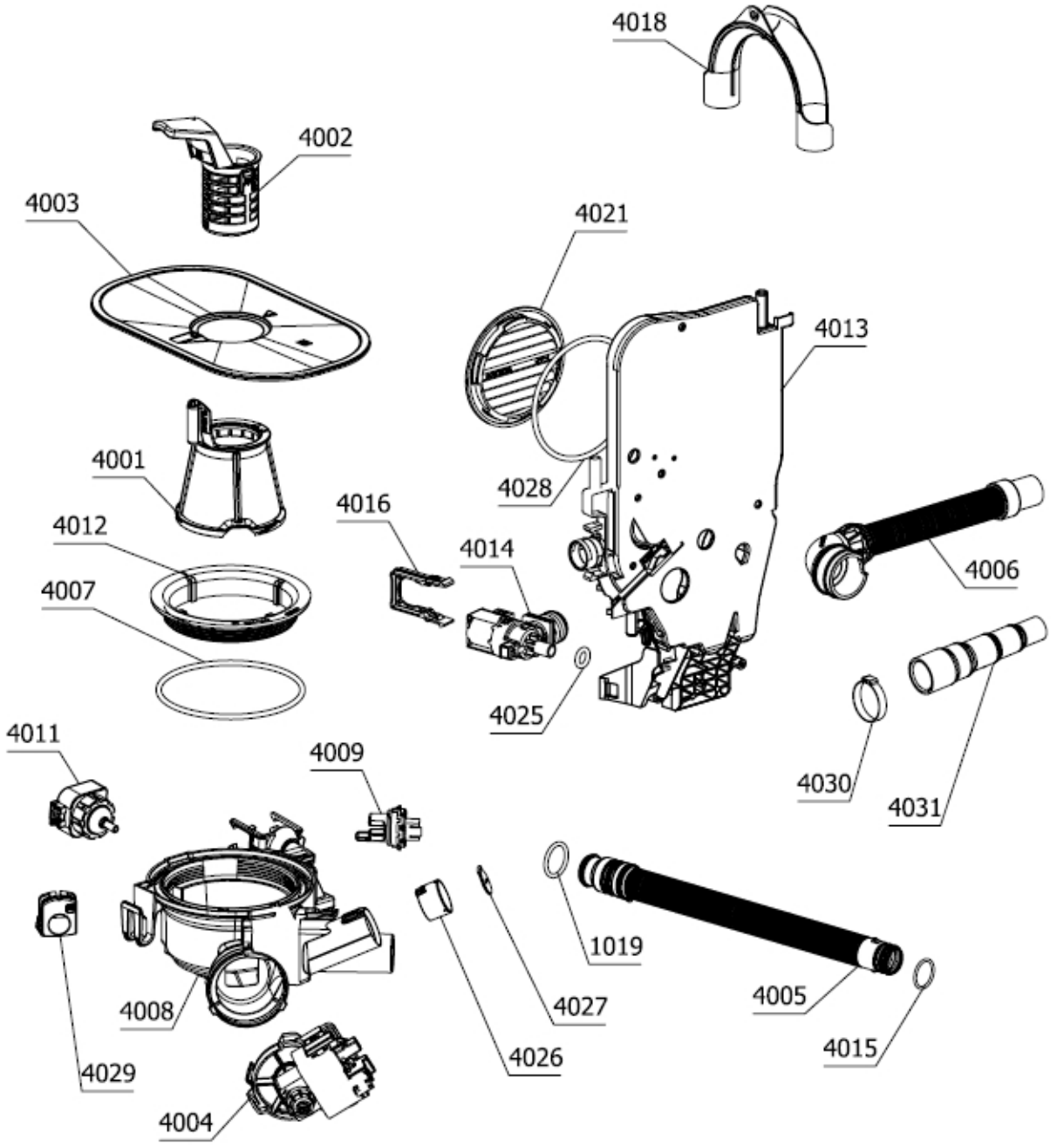

Position	Ident	Spare part description	Quantity	Validity	Extra ID
4001	784738	FILTER ASSY	1		
4002	515330	COARSE STRAINER	1		
4003	573752	UPPER STRAINER D0,6	1		
4004	581831	DRAIN PUMP 120V 60HZ LEILI	1		
4005	563263	DISCHARGE HOSE INTERIOR	1		
4006	689756	SET HOSE/CLAMP/CUFF SIPHONE DISCHARGE	1		
4007	700415	GASKET	1		
4008	784737	BOTTOM SUMP ASSY	1		

Position	Ident	Spare part description	Quantity	Validity	Extra ID
4009	508118	THERMISTOR SENSOR UL4	1		
4010	512673	O-RING 23X3 N70	1		
4011	589657	PRESSURE SENSOR SET DW30	1		
4012	700325	RING	1		
4013	714341	SET AIR BREAK,O-RING	1		
4014	611906	INLET VALVE ASSY 120 V	1		
4015	559007	O-RING 20,5X2	2		
4016	700439	CLAMP	1		
4018	498220	DISCHARGE HOSE BOW POM	1		
4021	514530	AIR BREAK LOCK RING	1		
4025	517668	O-RING 10X3,5	1		
4026	513850	NON-RETURN VALVE HOLDER	1		
4027	513851	NON-RETURN VALVE	1		
4028	708314	O-RING 95X4	1		
4029	512051	BOTTOM SUMP PLUG 1070-Y	1		
4030	700476	CLAMP	1		
4031	700484	END CUFF	1		

164654

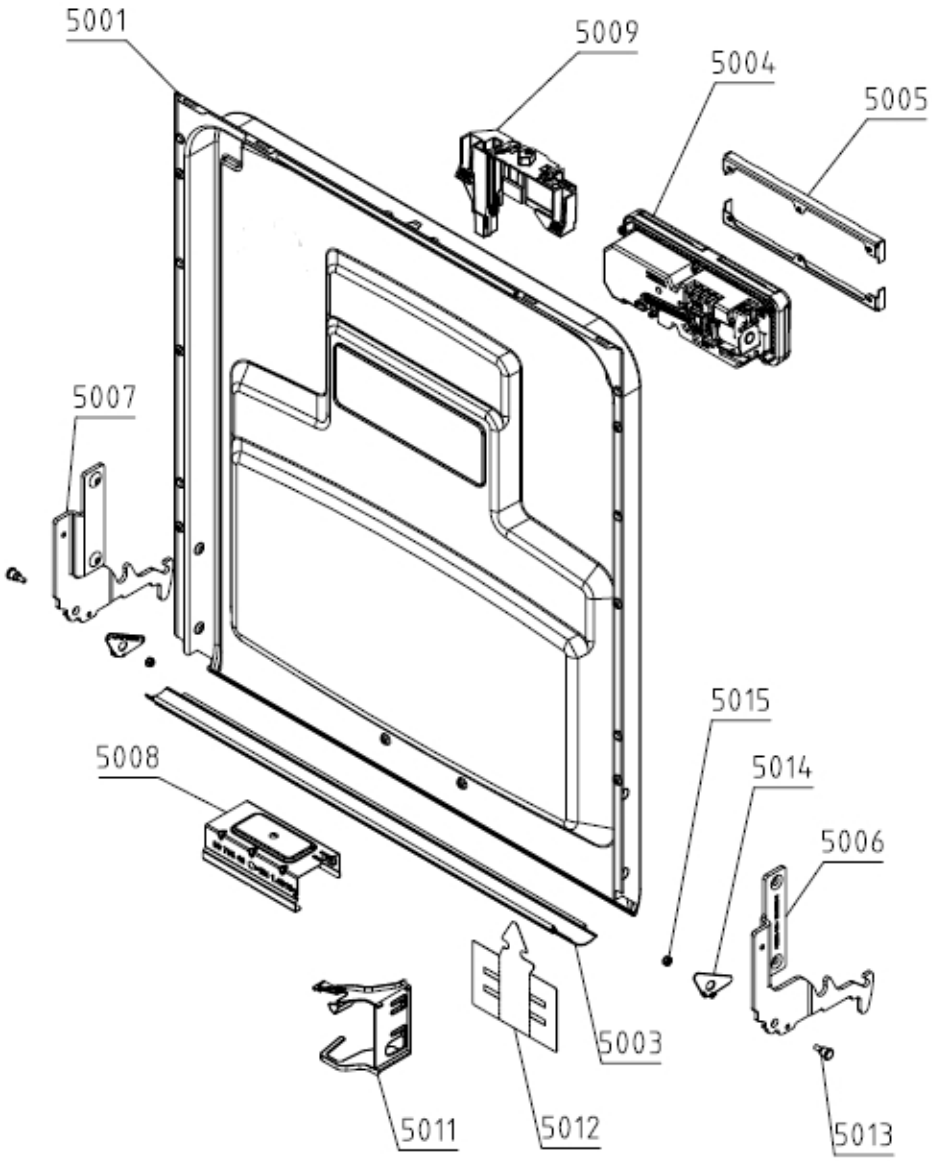

Position	Ident	Spare part description	Quantity	Validity	Extra ID
5001	655729	INTERIOR DOOR FS/SI XL DW40 ASSY	1		
5001A	785608	SCREW	6		
5001B	200617	SCREW PT KB40X10 WN1442 RFS	3		
5003	426743	DOOR GASKET	1		
5004	700275	SOAP DISPENSER	1		
5005	700559	SOAP DISPENSER HOLDER DW COMBI AWECO	2		
5005A	200621	SCREW PTK 40X14 WN1452 FZB T2	6		
5006	709479	HINGE LEFT	1		

Position	Ident	Spare part description	Quantity	Validity	Extra ID
5007	709480	HINGE RIGHT	1		
5007A	700243	SCREW M5X16-A2 TORX25 MKF	4.250		
5008	700475	HOLDER	1		
5008A	700470	SCREW ST4,2X13-A4 TORX20 RTS BUFAB	2		
5009	598879	DOOR LOCK	1		
5009A	570424	SCREW PTK 40X13 WN5454	4		
5011	449948	INTERIOR DOOR HARNESS HOLDER DW UL4 9005	1		
5012	700409	COVER	1		
5013	700312	HINGE SCREW	2		
5014	709327	HINGE WASHER RIGHT	1		
5014	709328	HINGE WASHER LEFT	1		
5015	700472	NUT M4-SELF-LOCKING	2		

165659

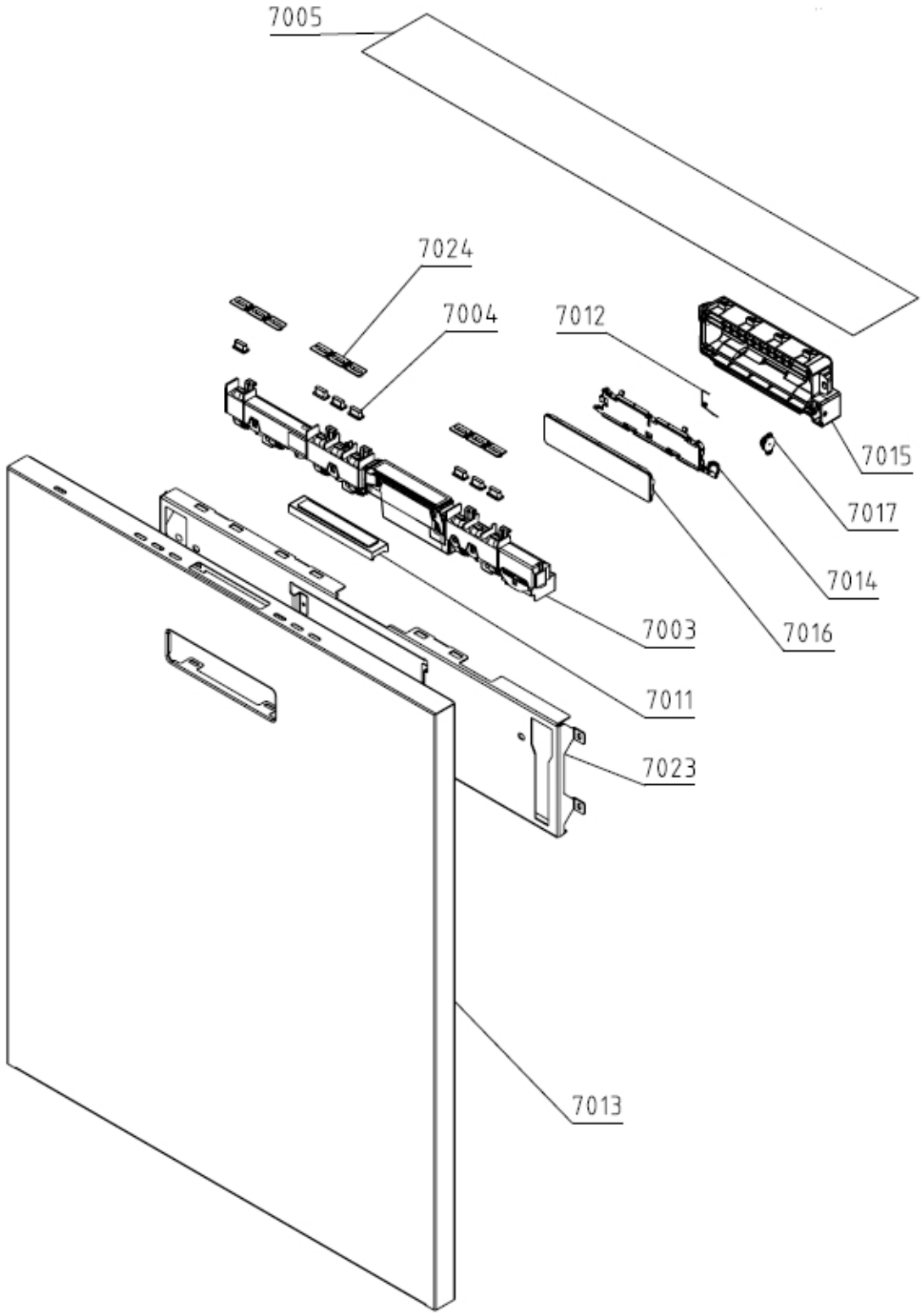

Position	Ident	Spare part description	Quantity	Validity	Extra ID
7003	810289	UPPER USER INTERFACE	1		
7004	552917	PUSH BUTTON	7		
7005	555456	PROTECTIVE FOIL	1		
7011	707190	SET TOP DISPLAY	1		
7012	700482	SPRING	1		

Position	Ident	Spare part description	Quantity	Validity	Extra ID
7013	707187	XTERIOR DOOR ASSY	1		
7014	587181	HANDLE LID CARRIE	1		
7015	588330	HANDLE INT FOR LID	1		
7016	587168	DECORATIVE PLATE HANDLE	1		
7017	587184	ROTARY DAMPER	1		
7023	699066	REINFORCEMENT OUTER DOOR TOP	1		
7024	707323	SET GUIDE PUSH BUTTONS	1		

166106

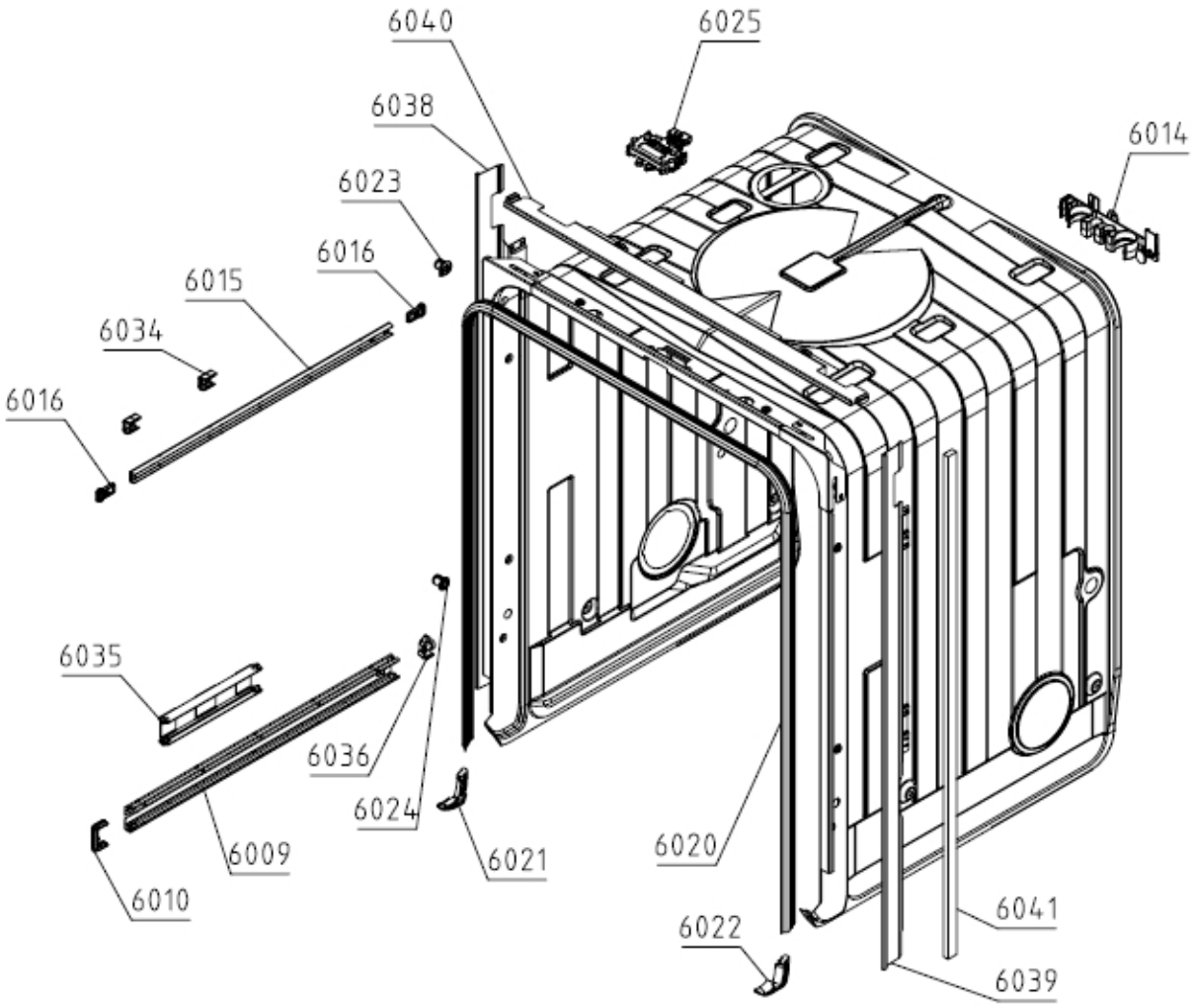

Position	Ident	Spare part description	Quantity	Validity	Extra ID
6009	797102	GUIDE	2		
6010	700430	RAIL BLOCK	2		
6014	700274	SUPPORT	1		
6015	476781	UPPER BASKET GUIDE	2		

Position	Ident	Spare part description	Quantity	Validity	Extra ID
6016	476783	BASKET GUIDES STOPPER 5502-B	4		
6020	704575	TUB GASKET DW 1701 UL4	1		
6021	700518	GASKET	1		
6022	700519	GASKET	1		
6023	440647	GUIDE PLUG DW 9500	2		
6024	640272	INSTALLATION PLUG	2		
6025	805101	DOOR LATCH	1		
6034	476782	SLIDE GUIDE TOP BASKET 5502-B	4		
6035	428814	SPACER	1		
6036	700313	GUIDE SHOCK ABSORBER	2		
6038	623060	TRIM STRIP L DW USA XXL SS BLANK	1		
6039	623061	TRIM STRIP R DW USA XXL SS BLANK	1		
6040	623062	TRIM STRIP LOW USA SS BLANK	1		
6041	671331	SEALING TAPE 8X15X750	2		
9999	700626	ATTACHMENT BAG 4 DISHWASHER	1		

168001

SET KABELSKI

WIRING HARNESS

KABELBAUM

CABLAGE ASSEMBLE

Position	Ident	Spare part description	Quantity	Validity	Extra ID
8001	509093	WIRING HARNESS GCUX2-DOOR SWITCH	1		
8002	509095	WIRING HARNESS GCUX4-COMBINED DISPENSER	1		
8003	509096	WIRING HARNESS GCUX5-RINSE AID	1		
8004	509097	WIRING HARNESS GCUX6-UI	1		
8005	509117	WIRING HARNESS GCUX19-HEATER	1		
8006	509098	WIRING HARNESS GCUX7-SALT SENSOR	1		
8007	509109	WIRING HARNESS GCUX11-SALT VALVE	1		
8008	509105	WIRING HARN.GCUX8-FLOW,PRES.,TURB.NTC	1		
8009	509118	WIRING HARNESS GCUX10-INLET DRAIN FLOAT	1		
8010	509111	WIRING HARNESS GCUX12-DIVERTER	1		
8013	509115	WIRING HARNESS GCUX16-CIRCULATION PUMP	1		
8017	537354	WIRING HARNESS-INNER DOOR ASSY	1		